Wiring
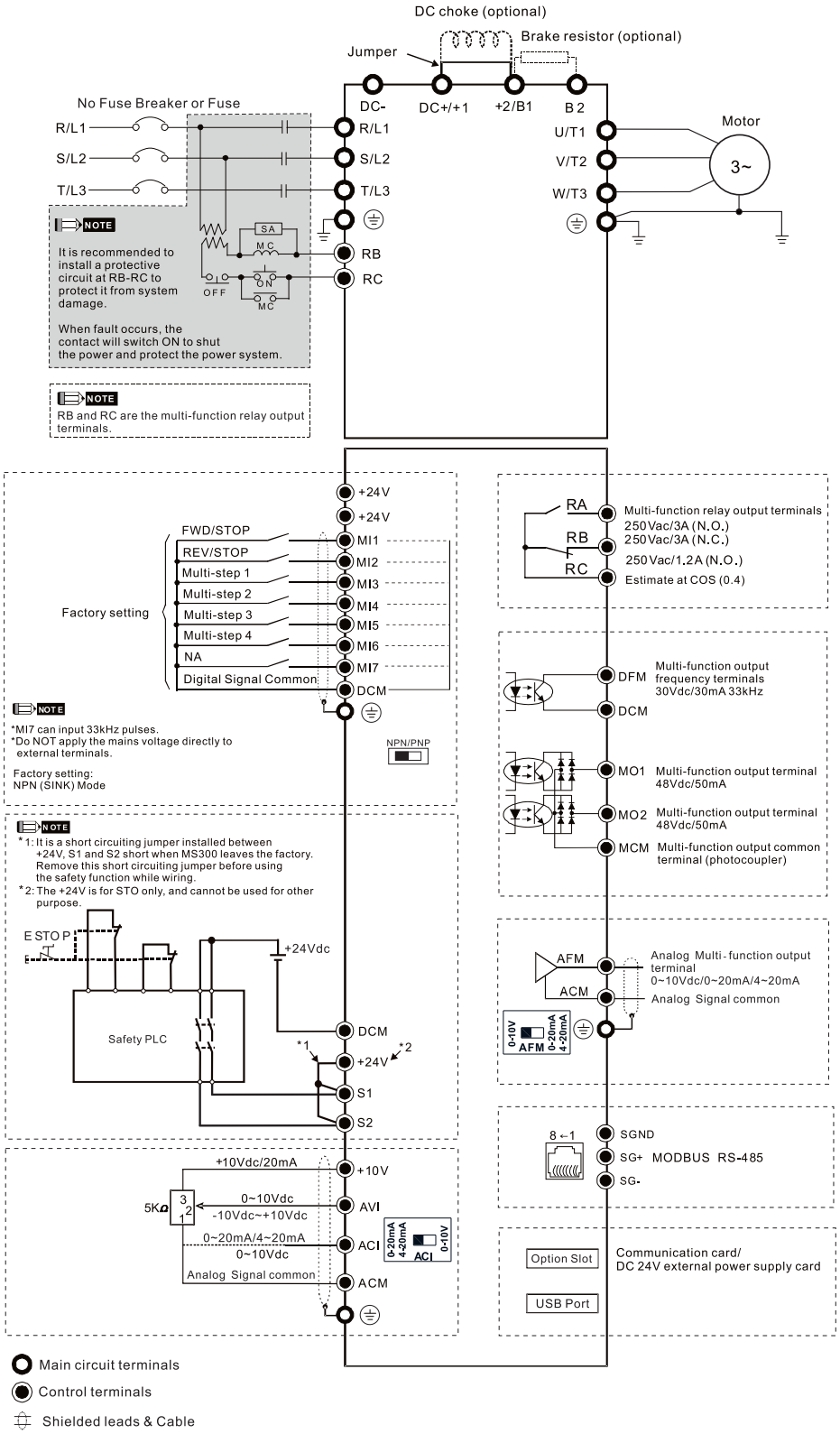
Input: Single-phase / 3-phase power